PART LIST

1. Bottom Power Console
   A. Compressor with 3/8” Air Line
   B. Switch (Wired Internet, PoE + Data)

2. Two (2) Power Entry Cords: One (1) for the Electronics, one (1) for the Compressor

Included but not shown: 3/8” Air Fitting Union (to connect air line to track/delivery system) and 3/8” Compression Nut with Plug (use when bypassing the 3/8” outlet).

Note: CAT5e cable for internet connection is not included. See ASSEMBLY AND INSTALLATION for system overview.

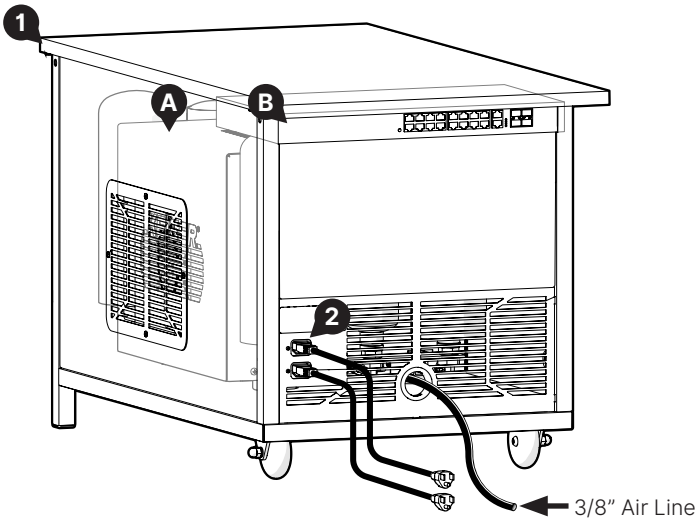

SPECIFICATIONS

Power Console Size and Weight

L x W x H:	Bottom Power Console 37 in. x 20 in. x 22 in. (940 mm x 508 mm x 559 mm)
Weight:	Bottom Power Console 175 lbs (80 kgs)
Footprint:	37 in. x 20 in. (940 mm x 508 mm)

Compressor Overview

Motor:	3/4 HP
Air Tank Capacity:	2.5 gallons (9.5 L) total
Machine Capacity:	Up to 8 KEISER machines
Pressurized Air Delivery:	100 – 120 psig (6.89 – 8.27 bar)
Air Line:	3/8 in. x 6 ft. (1.83 m) tubing, with 3/8 in. fittings
Air Outlets:	Left-hand side • 3/8” Compression Fitting (qty 1) • 1/4” Quick-disconnect (qty 2) Right-hand side • 1/4” Quick-disconnect (qty 3)
Lubrication Type:	Oil-less (requires no lubrication)
Decibel rating:	61 – 63 dB Under normal operating conditions, distance of 39.37 inches (1 m)

Electrical

Switch		Compressor	
Voltage:	100-240 V~	Voltage:	115/230 V~
Current:	11 A max	Current:	10/5 A
Frequency:	50-60 Hz	Frequency:	50/60 Hz
		Confirm compressor model for operating voltage	

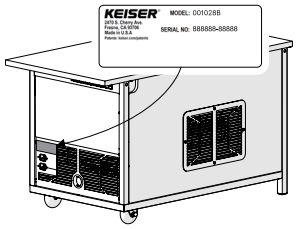

Reference the marking plate on unit for serial number and specific product information.

Please refer to the manufacturer’s user manuals for detailed product and safety information regarding the electronic devices.

IMPORTANT: DO NOT CONNECT OR REDUCE THE POWER CONSOLE 3/8” AIR LINE TO A 1/4” AIR LINE SYSTEM. The A400 System is designed for 3/8” air lines only. Any modifications/reductions may cause performance issues, including slow resistance increase.

Air Direct-Connect Note: Machines may connect directly to the 1/4” outlets on the compressor, using the 1/4” quick-disconnect with 8 mm tubing (supplied with the machines, 7 ft / 2.13 m in length), in place of the 3/8” air supply line. This is a direct connection, not part of a 1/4” air line system. Installation of a 3/8” compression nut with plug is required. Supports up to five machines.

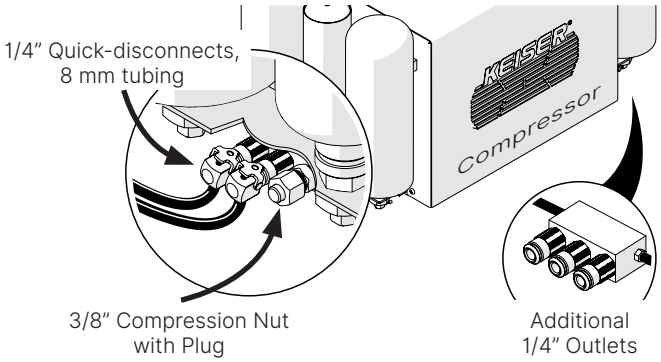

© Copyright 2026, Keiser Corporation. All rights reserved.

INTERNAL CONNECTIONS DIAGRAM

Internal air and power connection points shown for service reference.

Power cords are labeled inside the console and highlighted here for visibility:

1. Air Compressor
2. Switch: Wired Internet, PoE + Data
3. Secondary Air Compressor
   (for Top Power Console configurations)
4. Reserved for future use
   (no installer action required)

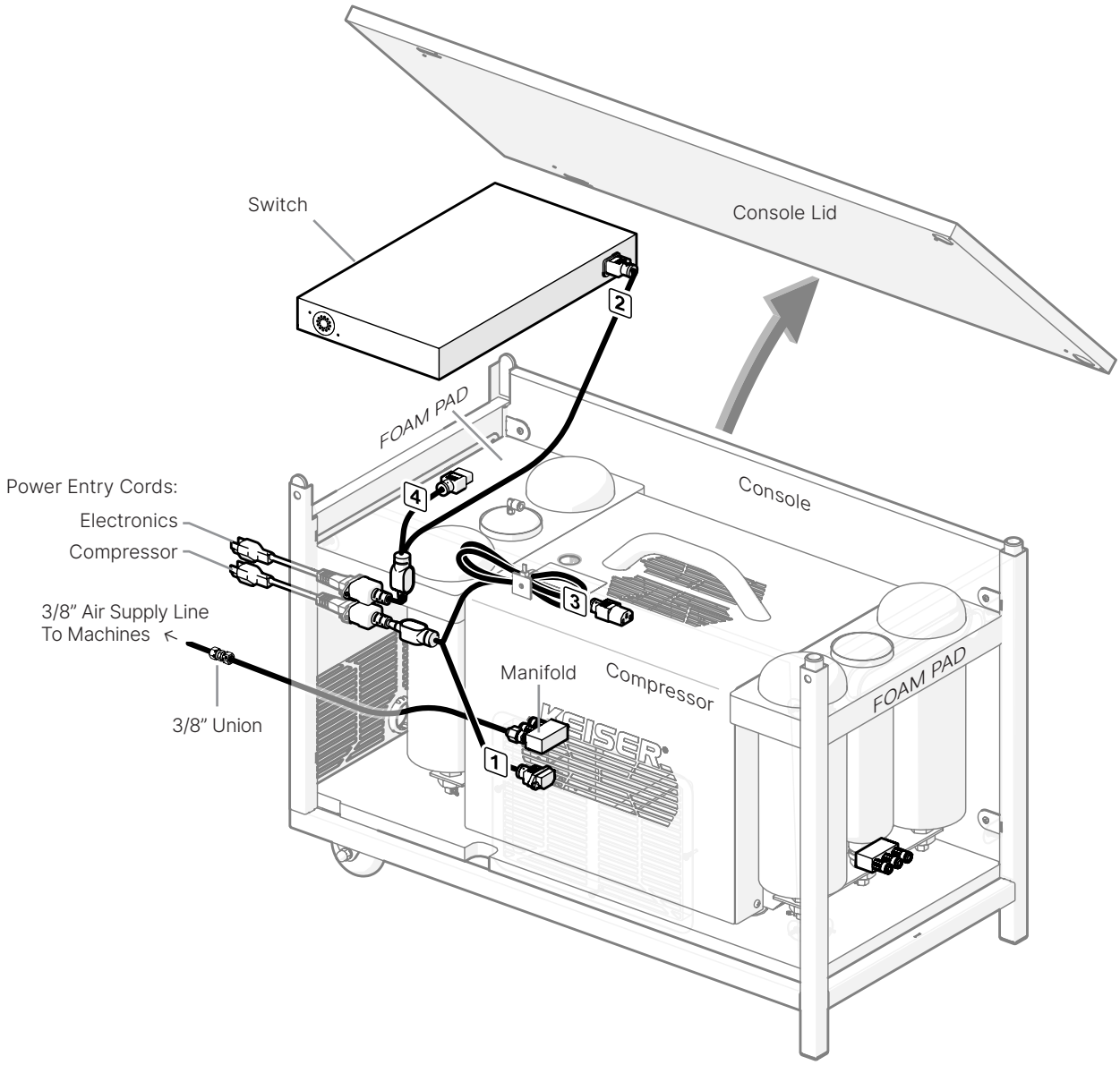

Internal Connections Diagram
(Service Reference)

For safe shutdown procedure, see SYSTEM POWER section.

POWER REQUIREMENTS

Application: All Bottom and Plus Power Console configurations

- **Dedicated Circuit:** Plug the compressor and electronics into a NEMA 6-20R duplex outlet/receptacle on a separate, dedicated, and grounded 230V branch circuit protected by a 20-amp circuit breaker. Do not share this circuit with other devices.
- **Stable Power Supply:** Ensure the power supply is stable, reliable, and meets the necessary specifications (230V, 20A) to support all the devices in the console(s).
- **Direct Connection:** Avoid using extension cords or power strips; connect directly to the dedicated outlet.
- **Backup Power:** Consider implementing backup power options (e.g., UPS) to the console's electrical power entry point to ensure uninterrupted operation and prevent loss of data collection from machines during power outages.
- **Consult an Electrician:** If you're unsure about the dedicated branch circuit specification or have questions about the electrical requirements, consult a licensed electrician.

NEMA 6-20R Duplex Outlet 230V, 20A, grounded

INTERNET and Wi-Fi

Internet - General Information
The Switch requires a **wired** Internet connection for firmware updates. If Internet access is restricted, consult the facility's IT or Network Administrator before equipment delivery.

- **Speed:** A minimum of 20 Mbps download and 5 Mbps upload is recommended to support data transfer, firmware updates, and remote support.

Connecting the Switch to the Internet
Connect the facility's Ethernet internet cable to the ETH / BOOT port on the Switch.

- The system is configured to use DHCP for automatic IP address assignment. A DHCP-enabled network is required for proper operation and to assign IP addresses automatically.
- The static network interface for internal communication is set to 192.168.150.2.
- Domain List: The following domains must be accessible for updates and diagnostics: *.keiser.com, *.docker.com, *.docker.io, *.sentry.io, 50.234.39.188, ntp.ubuntu.com

NOTE: Static IPs and port configurations are not required.

CAT5e Cable Specifications
- **Maximum Cable Length:** 100 m (328 ft) per machine. Each machine requires a dedicated CAT5e homerun connection to the Switch.
- **Data Transfer Speed:** Up to 1 Gbps (Gigabit Ethernet).
- **Bandwidth:** 100 MHz.

IMPORTANT: Use CAT5e (enhanced) cabling, not CAT5, to maintain system design specifications.
- Improved Cross-talk Reduction: Better protection against signal interference.
- Higher Data Speeds: CAT5e supports Gigabit Ethernet, while CAT5 is limited to 100 Mbps.

ASSEMBLY AND INSTALLATION

Assembly and installation must be performed by qualified technicians with the necessary knowledge, tools, and equipment. These procedures are not for DIY installation.

System Overview

The Bottom Power Console supplies air and power for up to eight KEISER A400 machines. It includes:

A. Compressor
B. Switch: Wired Internet, PoE + Data

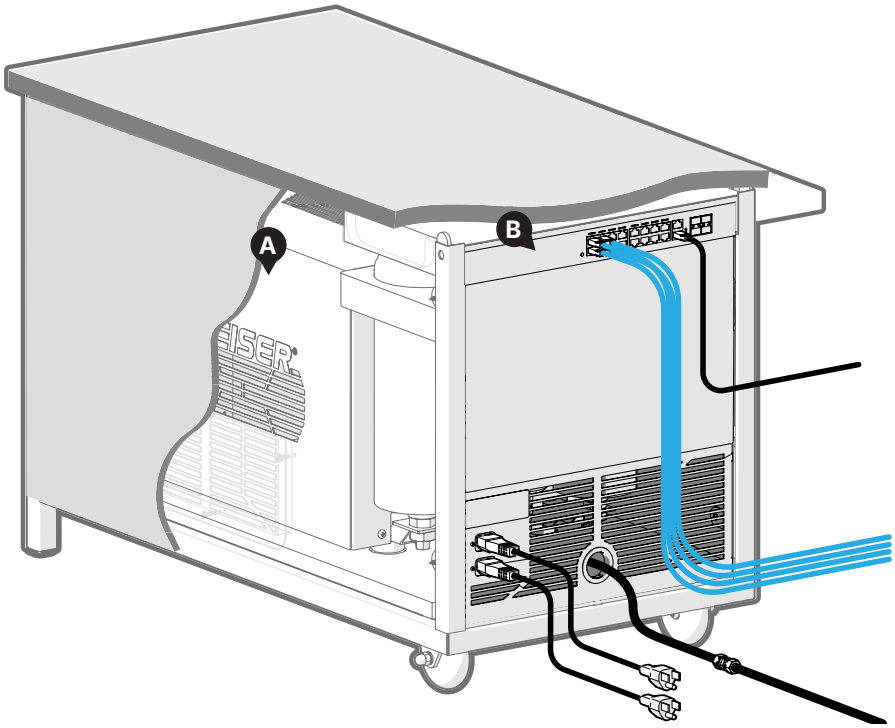

Bottom Power Console Overview

Location and Placement

- Locate the unit in a clean, dry, and well-ventilated area.
- Place the unit on a flat, level surface.
- Ensure adequate air flow around the unit.
- Ensure a minimum of 12 in. (305 mm) of clear space around the unit.
- Use an electrical circuit with the appropriate power rating; avoid the use of an extension cord.
- Do not store/stack any items on top of, or leaning on the unit.

Tools Required

- Tube Cutter
- Adjustable Wrench
- 5/8” Open-end Wrench

Assembly Procedure

The A400 Bottom Power Console arrives fully assembled. Use this diagram to confirm connections.

IMPORTANT: Follow the sequence on the SYSTEMIZATION page before applying power.

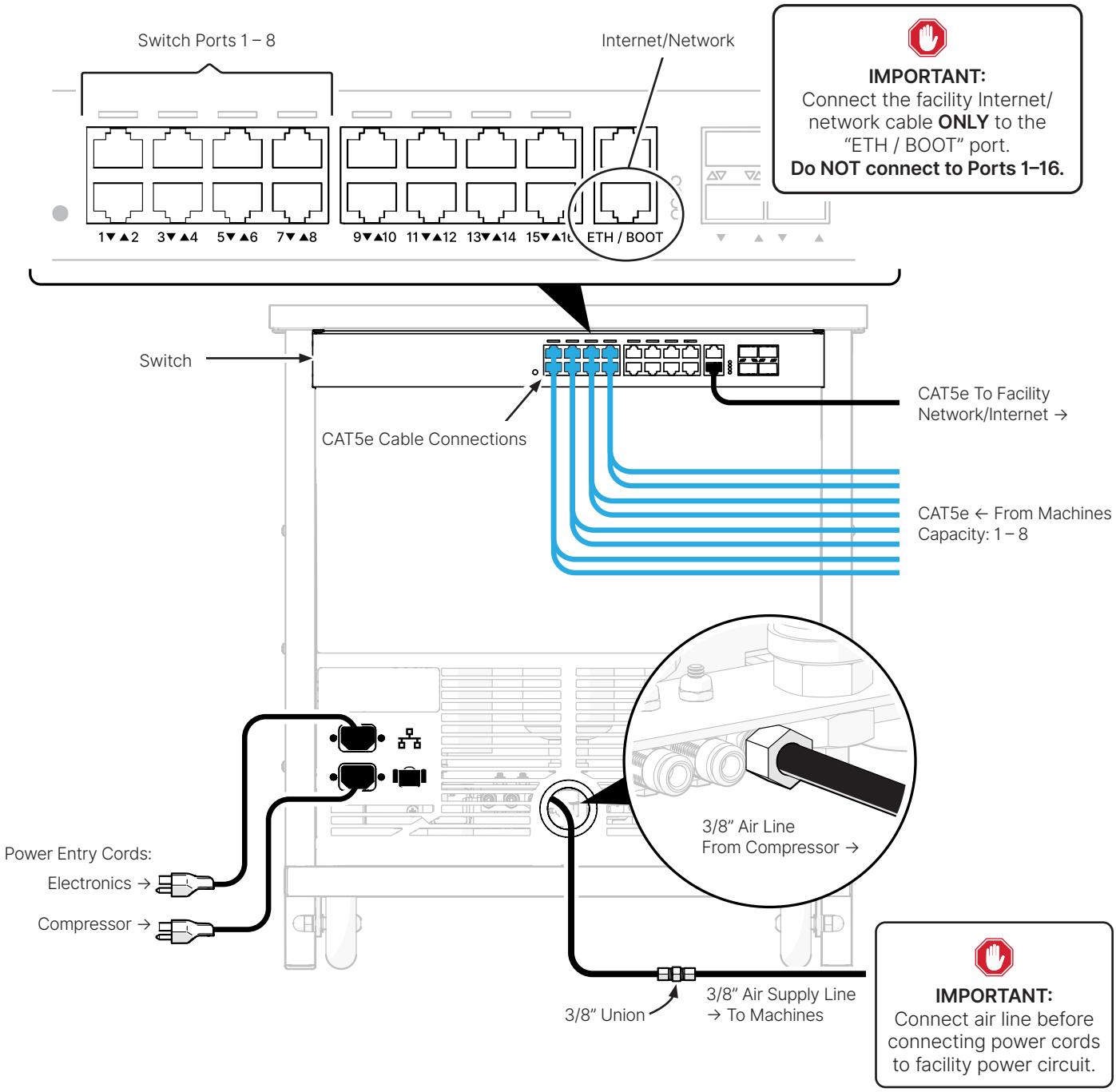

Bottom Power Console Connections Diagram

NOTE:

- **CAT5e Ethernet Cable Color:** Black CAT5e cables for machine connections are supplied by Keiser; blue CAT5e cables are shown for illustration purposes.
- **Switch Network Configuration:** Ports 1–16 provide DHCP service for connected equipment. Do not connect the facility network to these ports; doing so can disrupt the facility network.
- **Switch Port Connections:** Connect machine cables to switch ports in sequential order (1, 2, 3, etc.) for ease of installation and troubleshooting.

SYSTEMIZATION

Once assembly is complete, the Bottom Power Console is ready for system installation. NOTE: Track/delivery system sold and installed separately.

Procedure:

1. **Connect the air supply to the track/delivery system.**
   - Use a 3/8" Union Fitting to connect the 3/8" Air Line from the Power Console to the Air Supply Line at the track/delivery system.
2. **Connect the CAT5e cables from the track/delivery system to the Switch.**
   - Surface-mounted outlets (typical, as shown) or direct to A400 network-connected wall/floor outlets.
3. **Connect the Machines to the track/delivery outlet.**
   - Air Line Quick-disconnect (QD) and PoE Cable.
4. **Connect the Switch to the Internet using a CAT5e Cable.**
5. **Power on the Power Console** by connecting the two Power Entry Cords (Compressor and Electronics) into a separate, dedicated, and grounded branch power circuits (NEMA 6-20R duplex outlet).

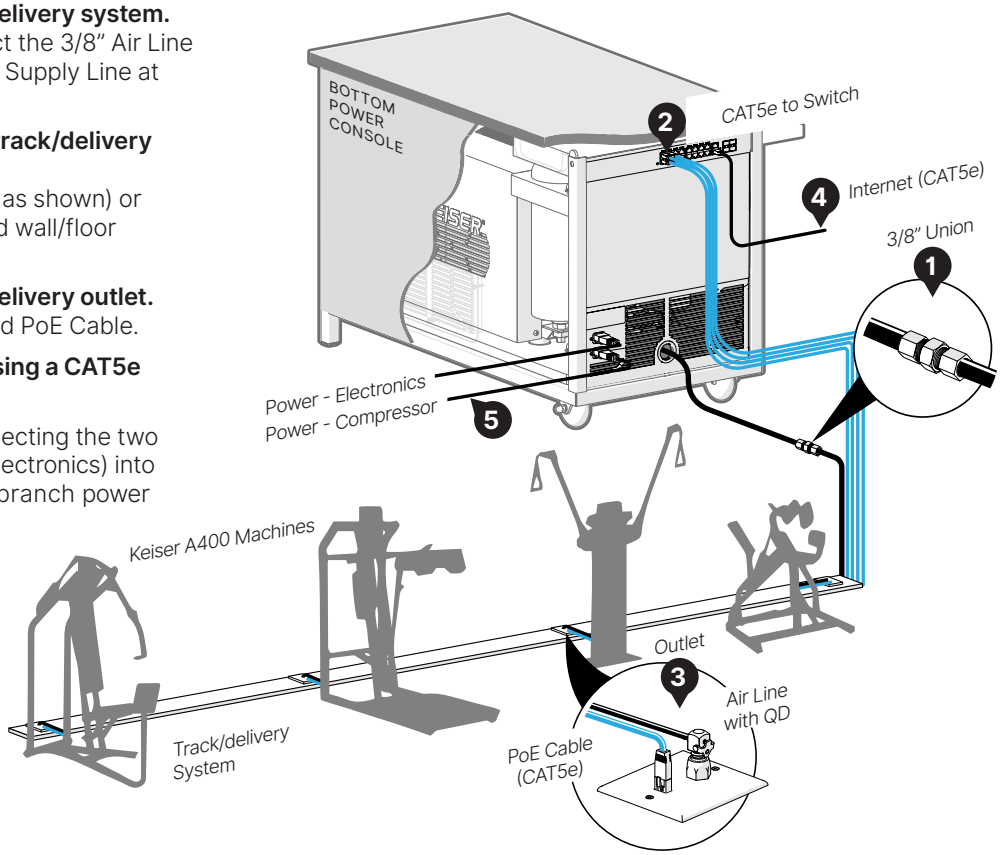

System Power:

Once the Power Console is powered ON:

- Compressor clicks; motor starts after 5–10 seconds.
- Switch powers ON; status LEDs illuminate.

Power Down / Relocation

1. Ensure machines are idle and users are signed out.
2. Disconnect power cords and CAT5e cables (labelling recommended).

For Storage / Transport

- Disconnect the air supply and bleed Compressor air (tools: two adjustable wrenches).
- Cover unit; store indoors.
- Do not stack or lean items against the unit.